Mini Camlock

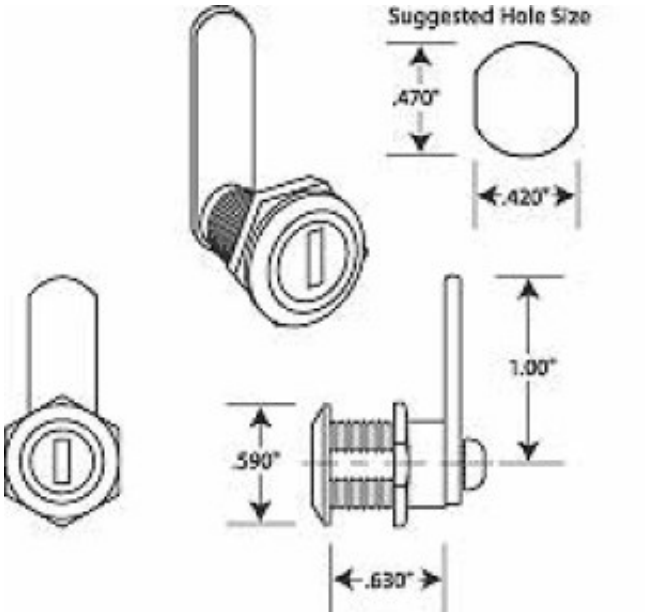

Part #34M Mini camlock

Price $2.55
Tax amount

Ask a question about this product

Description

Mini Camlock

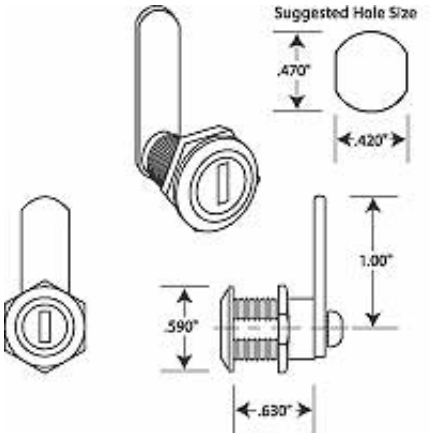

Specifications:
• Zinc alloy die cast housing & cylinder
• Bright chrome-plated standard
• 4-disc tumbler mechanism camlock
• Rotation at 90º clockwise
• Cam lever screw on
• Hex nut mounted

Application: For all display doors or lids

Size: Maximum material thickness of .325” (8mm)

Units in box: 1

//